Octagon Structure – assembly, end view.
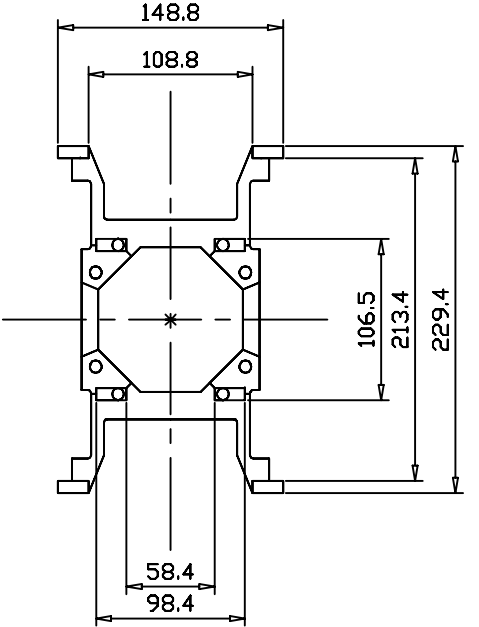
MAY, 1998.