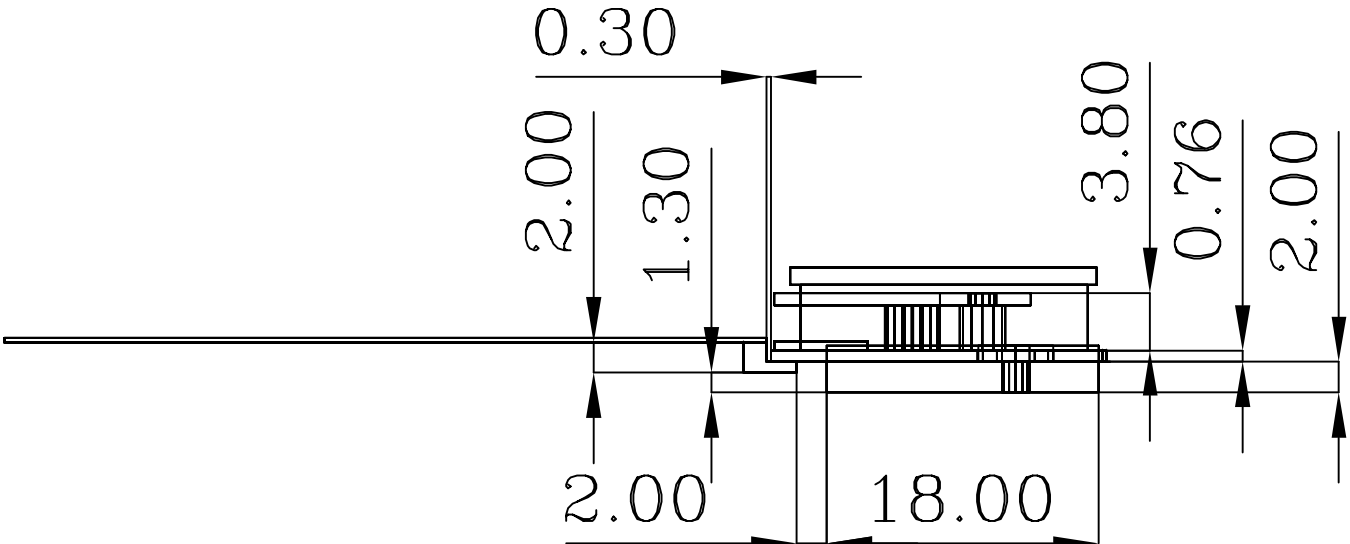Vertex module – end view, 7 May 1998